REV.	LOC.	REVISION	DATE
B		Removed $\frac{3}{4}$" Overhang On Gate Bottom	9/27/22

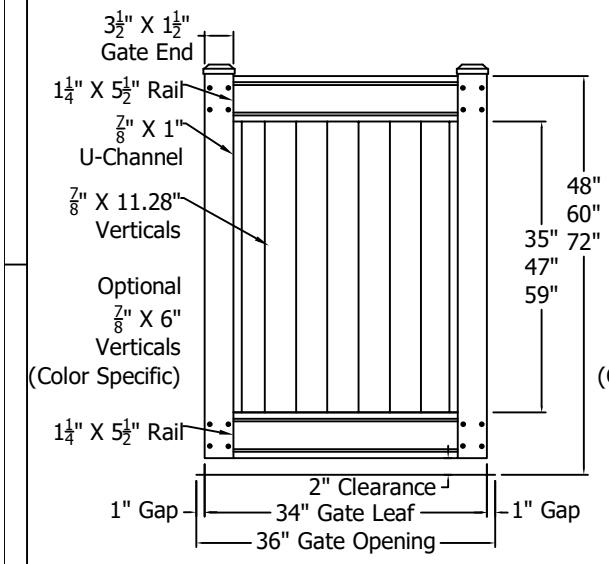

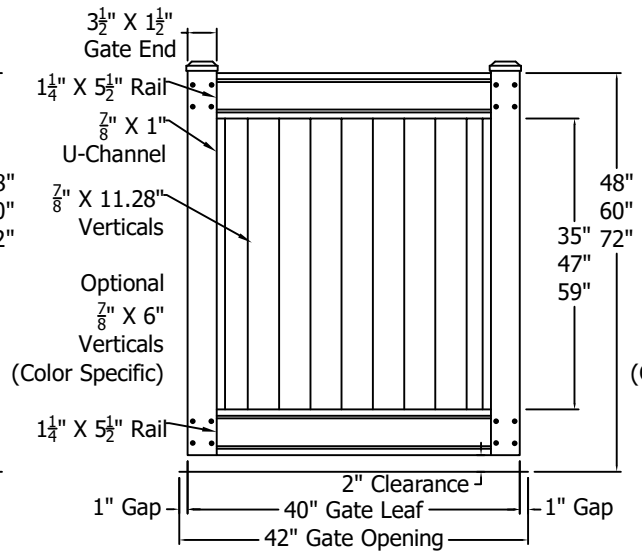

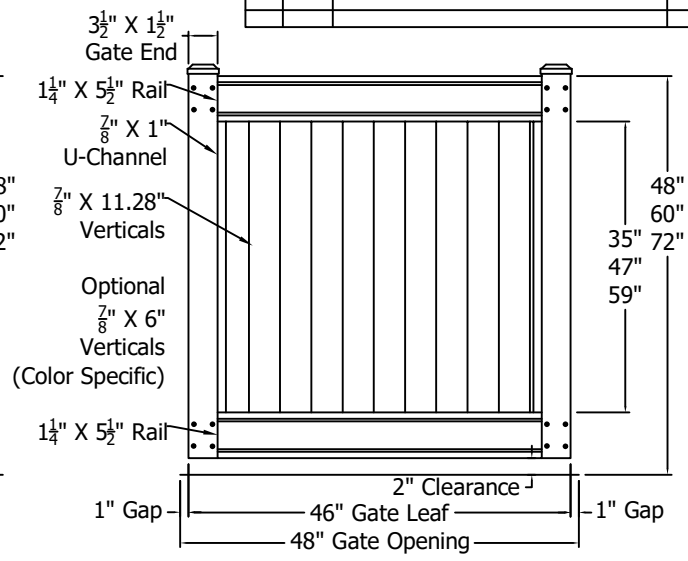

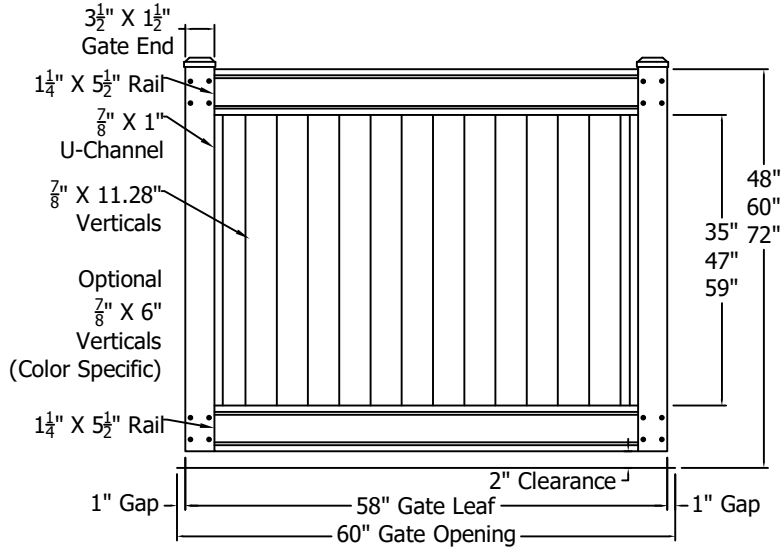

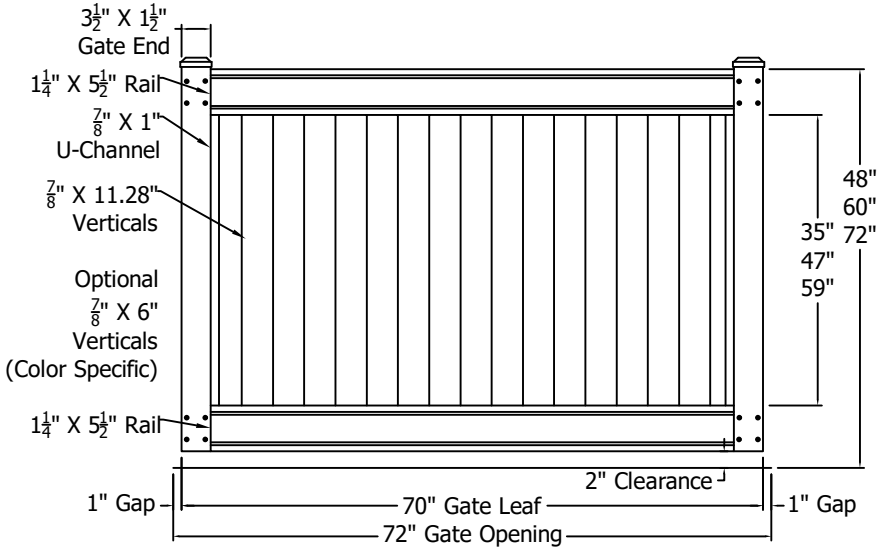

Polyvinyl
VINYL FENCING

Digger Specialties Inc.
Transforming the Outdoor Living Experience™
3446 US 6 EAST
Bremen, IN 46506
diggerspecialties.com

DRAWN BY: EH	STYLE: **Designer Standard Gates**
DATE DRAWN: 09-27-2022	
SCALE = 1":1"	AS SHOWN 48" T
DRAFT NO.: 20220927-1E	LOC: Z:\Designer\Updated Standard Drawings
	REV. B