REV.	LOC.	REVISION	DATE
B		Updated Logos	12/17/20

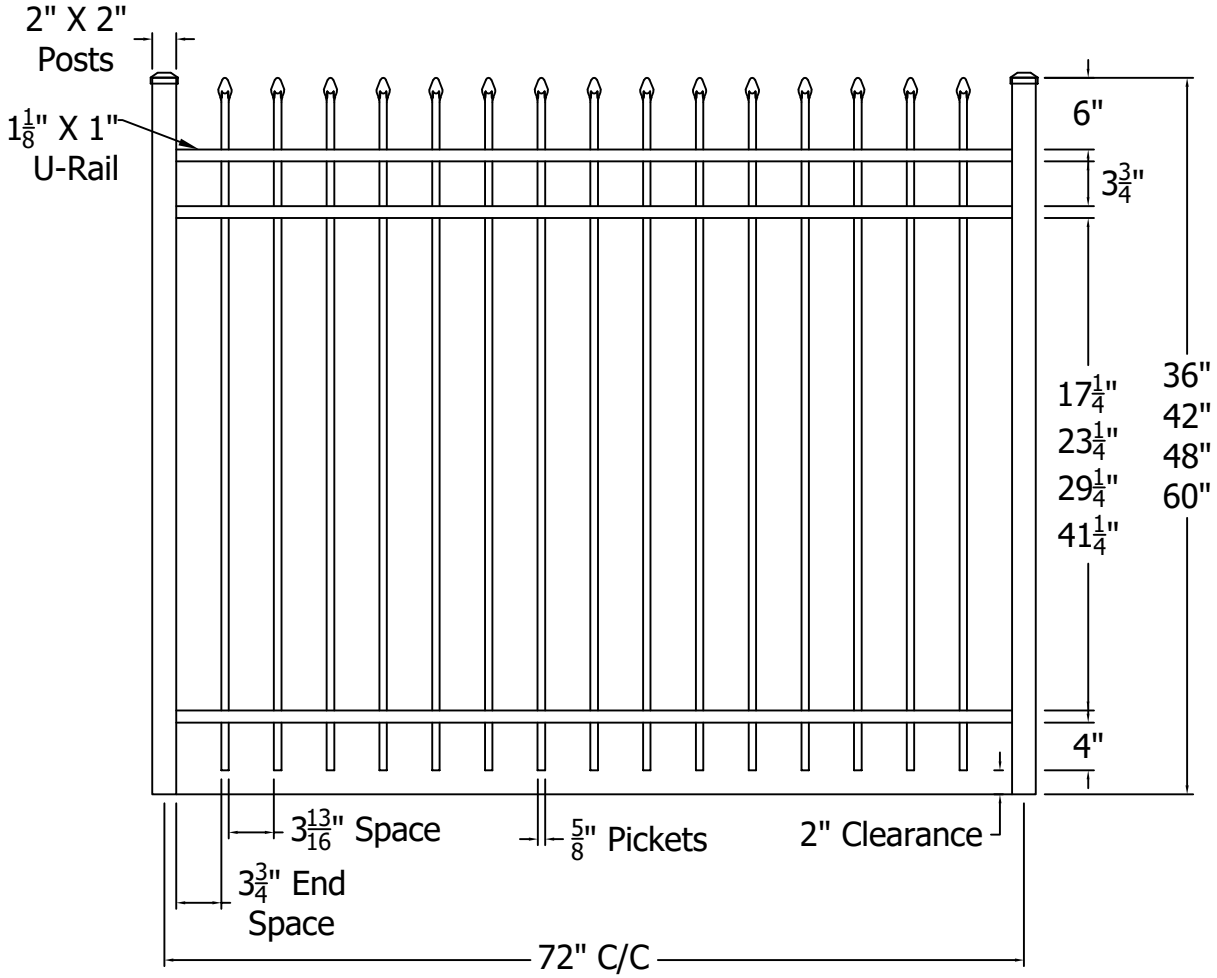

Finial Options

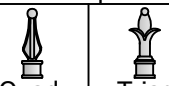

Quad Triad

Fleur-de-lis

Regis® ALUMINUM FENCING

Digger Specialties Inc.
Transforming the Outdoor Living Experience™
3446 US 6 EAST
Bremen, IN 46506
diggerspecialties.com

DRAWN BY: EH	STYLE: **3131**
DATE DRAWN: 09-13-2019	
SCALE = 1":1"	AS SHOWN: 60" T
DRAFT NO.: 20190913-1E	LOC: Z:\Aluminum\Regis\3000 Series\3000 SRS Sections\Updated Standard Drawings — REV.

REV.	LOC.	REVISION	DATE
B		Updated Logos	12/17/20

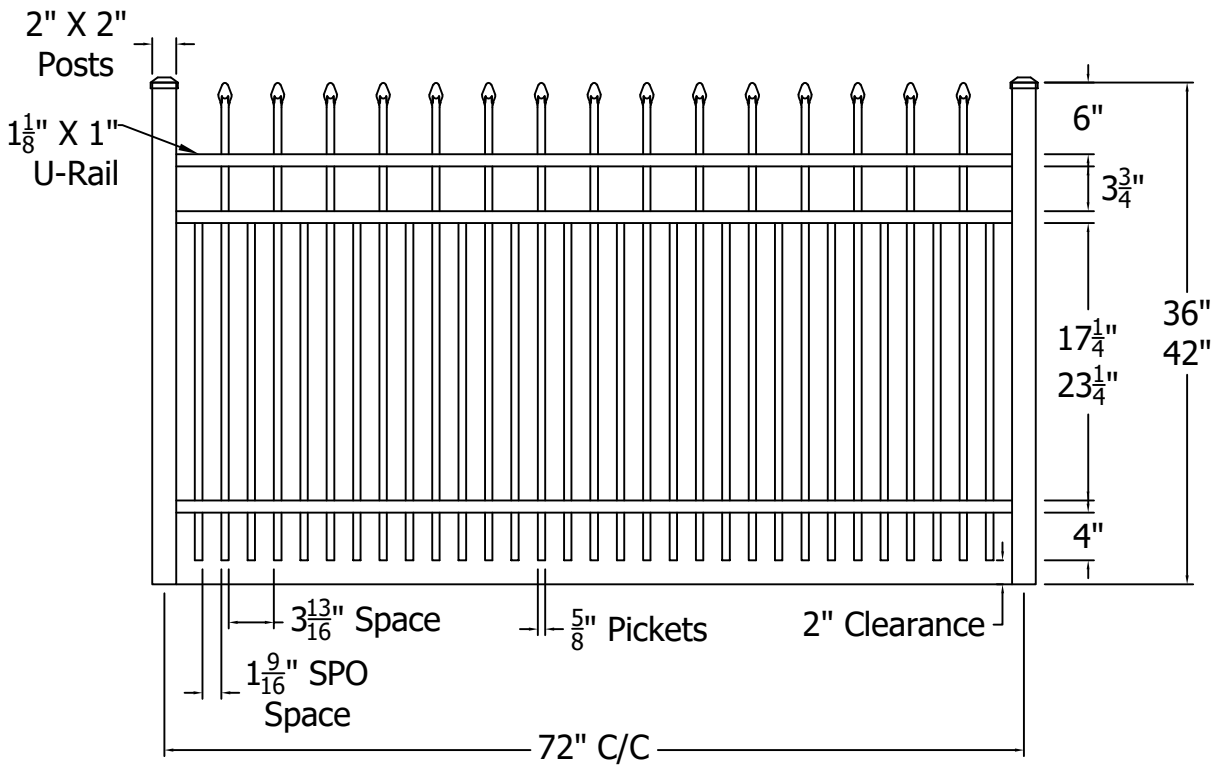

Finial Options

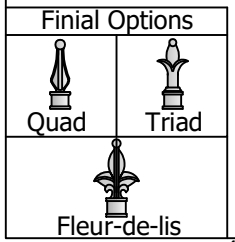

Regis®
ALUMINUM FENCING

Digger Specialties Inc.
Transforming the Outdoor Living Experience™
3446 US 6 EAST
Bremen, IN 46506
diggerspecialties.com

DRAWN BY: EH	STYLE: **3131 Short Picket Option**
DATE DRAWN: 09-13-2019	
SCALE = 1":1"	AS SHOWN: 42" T
DRAFT NO.: 20190913-1E	LOC: Z:\Aluminum\Regis\3000 Series\3000 SRS Sections\Updated Standard Drawings — REV.

REV.	LOC.	REVISION	DATE
B		Updated Logos	12/17/20

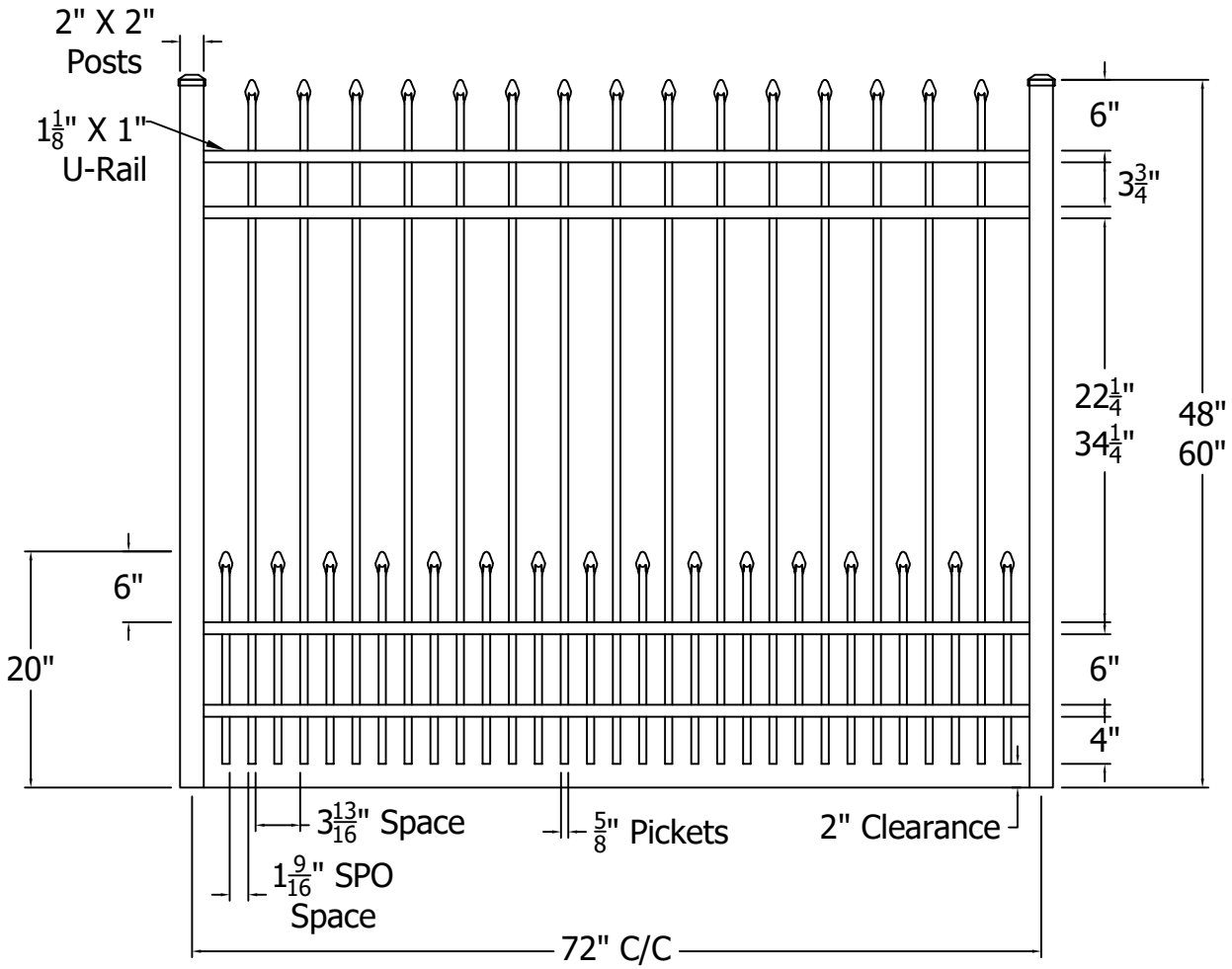

Finial Options

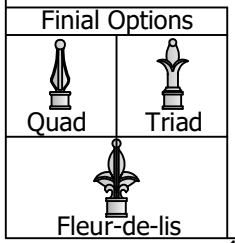

Regis® ALUMINUM FENCING

Digger Specialties Inc.
Transforming the Outdoor Living Experience™
3446 US 6 EAST
Bremen, IN 46506
diggerspecialties.com

DRAWN BY: EH	STYLE: **3131 Short Picket Option**
DATE DRAWN: 09-13-2019	
SCALE = 1":1"	AS SHOWN: 60" T
DRAFT NO.: 20190913-1E	LOC: Z:\Aluminum\Regis\3000 Series\3000 SRS Sections\Updated Standard Drawings — REV.

REV.	LOC.	REVISION	DATE
B		Updated Logos	12/18/20

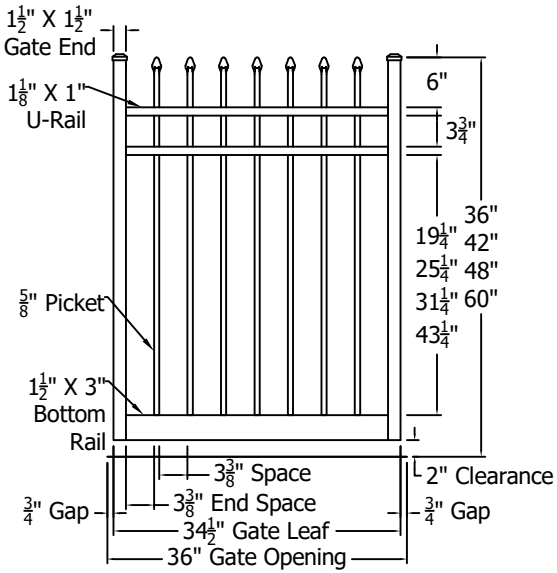

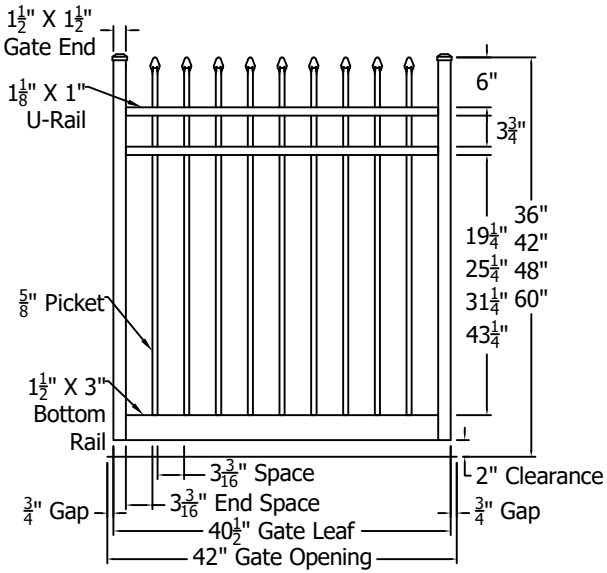

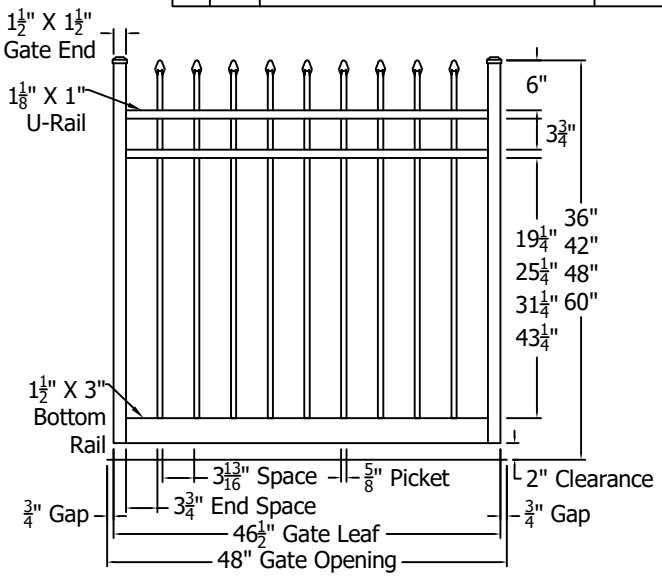

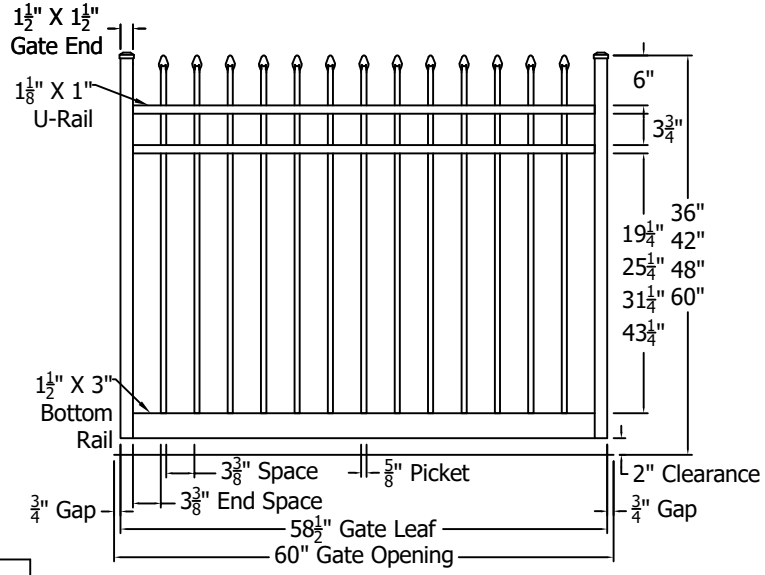

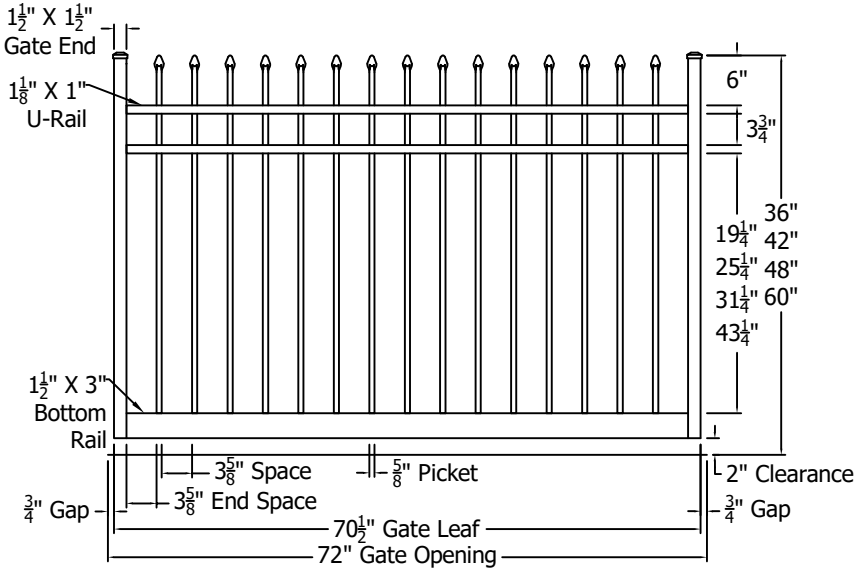

Finial Options

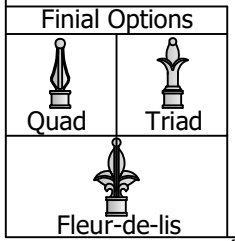

Regis® ALUMINUM FENCING

Digger Specialties Inc.
Transforming the Outdoor Living Experience™
3446 US 6 EAST
Bremen, IN 46506
diggerspecialties.com

DRAWN BY: EH	STYLE: **3131 Standard Gates**
DATE DRAWN: 09-13-2019	
SCALE = 1":1"	AS SHOWN: 48" T
DRAFT NO.: 20190913-1E	LOC: Z:\Aluminum\Regis\3000 Series\3000 SRS Gates\Updated Standard Drawings — REV. B

REV.	LOC.	REVISION	DATE
B		Updated Logos	12/18/20

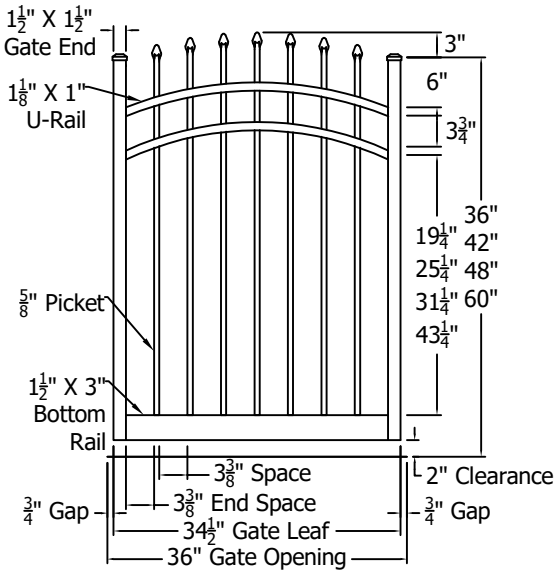

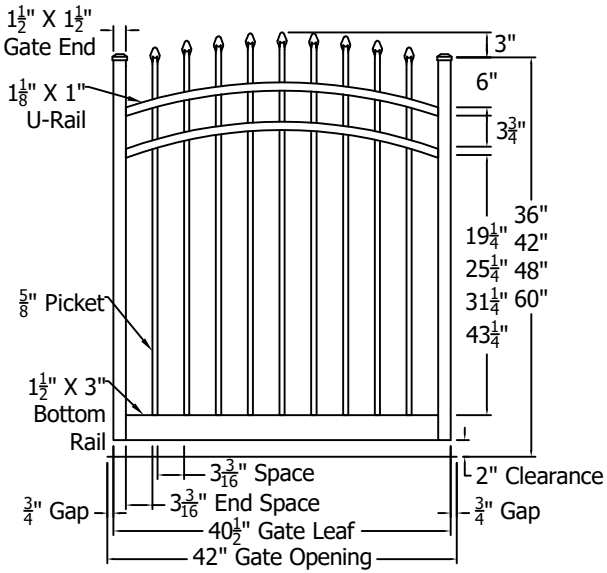

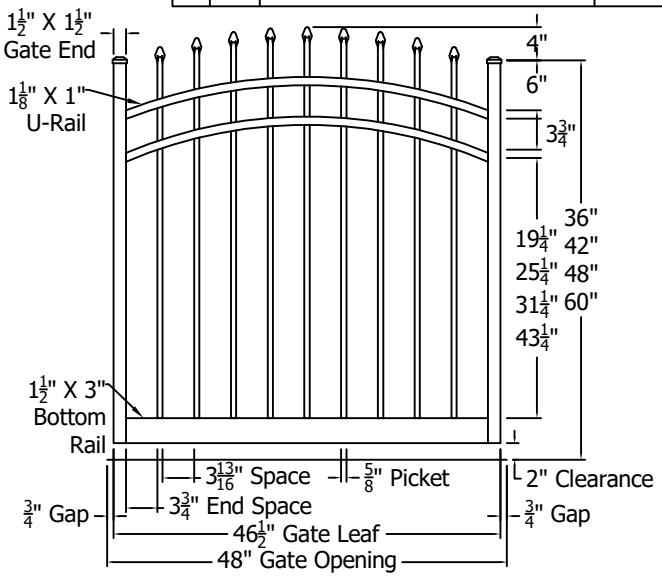

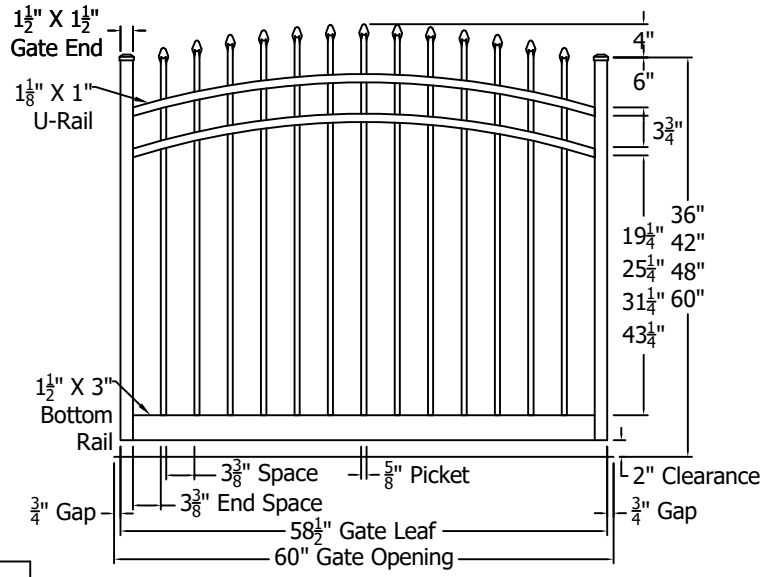

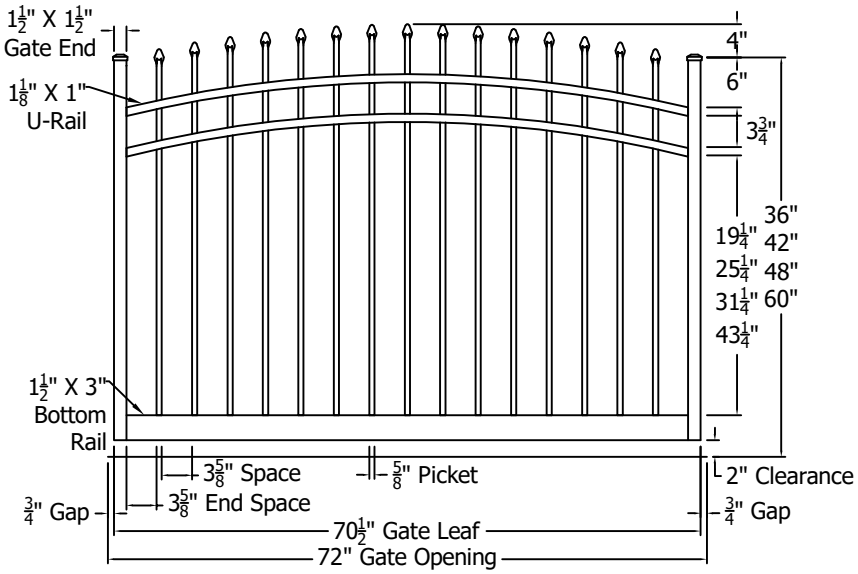

Finial Options

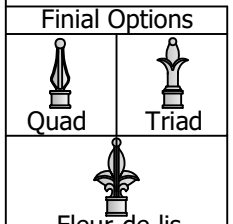

Regis® ALUMINUM FENCING

DSI Digger Specialties Inc.
Transforming the Outdoor Living Experience™
3446 US 6 EAST
Bremen, IN 46506
diggerspecialties.com

DRAWN BY: EH	STYLE: **3131 Standard Gates Arched**
DATE DRAWN: 09-13-2019	
SCALE = 1":1"	AS SHOWN: 48" T
DRAFT NO.: 20190913-1E	LOC: Z:\Aluminum\Regis\3000 Series\3000 SRS Gates\Updated Standard Drawings — REV. B

REV.	LOC.	REVISION	DATE
B		Updated Logos	12/18/20

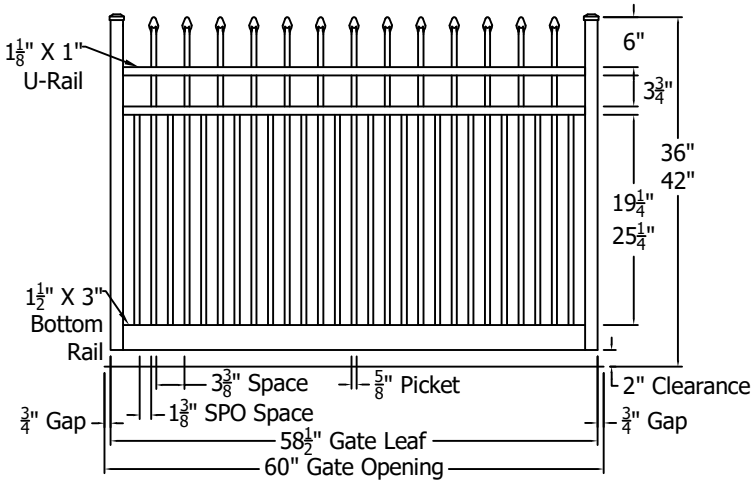

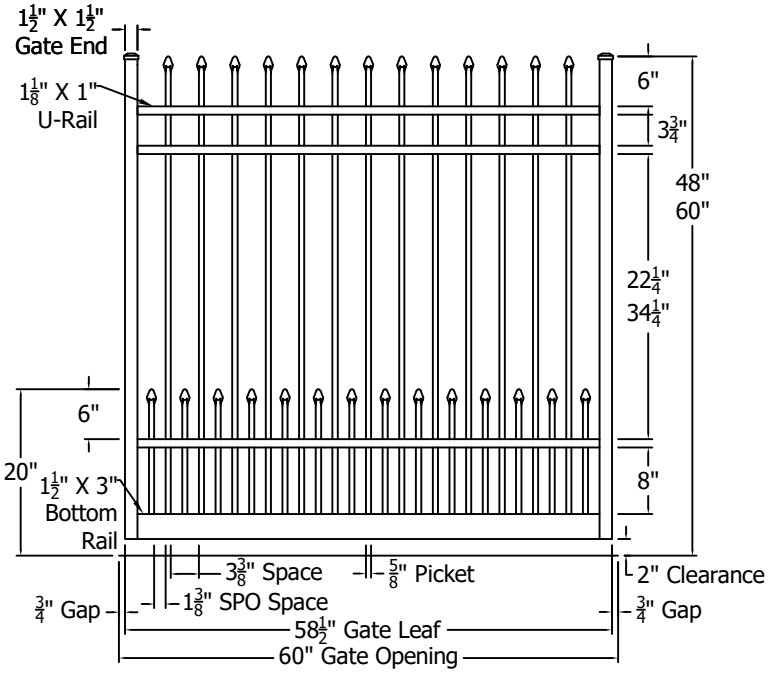

Finial Options

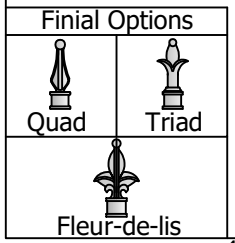

Regis® ALUMINUM FENCING

Digger Specialties Inc.
Transforming the Outdoor Living Experience™
3446 US 6 EAST
Bremen, IN 46506
diggerspecialties.com

DRAWN BY: EH	STYLE: **3131 Standard Gates SPO**
DATE DRAWN: 09-13-2019	
SCALE = 1":1"	AS SHOWN: 42"/60" T
DRAFT NO.: 20190913-1E	LOC: Z:\Aluminum\Regis\3000 Series\3000 SRS Gates\Updated Standard Drawings — REV. B